Pull MASTER®

Winch **Power.** Built to Order.

PL5

HYDRAULIC PLANETARY WINCH

Experience the power of Pullmaster Planetary Winches.

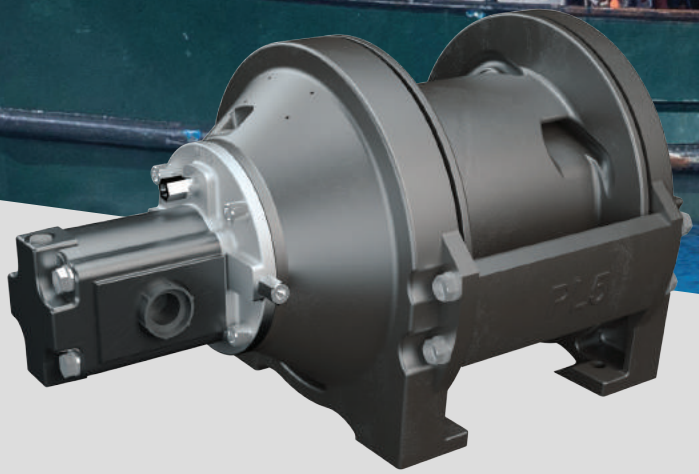

MODEL PL5 HYDRAULIC PLANETARY WINCH

The PULLMASTER Model PL5 is a high performance, high efficiency planetary winch, having equal speed in both directions. The cable drum of this unit conforms with OSHA recommendations making this winch especially suitable for application where a load is raised and lowered.

The PULLMASTER Model PL5 is powered by a hydraulic gear motor and a reduction ratio of 39:1 is established by two planetary stages. The automatic, multi-disc brake is spring applied - pressure released. An over-running clutch, between the motor shaft and the brake assembly, permits free rotation in the “Hoisting” direction without affecting the brake. During “Lowering” operation the over-running clutch locks, causing the brake discs to rotate between a series of divider discs. Dynamic braking is then achieved by modulation of the winch control valve handle. When the control is returned to neutral position the brake applies automatically. A counter-balance valve is not required for smooth and positive “Down” control of the Model PL5 planetary winch. During lowering of a load the temperature generated by the disc brake is dissipated by a flow of hydraulic fluid supplied from the hydraulic motor. This circulation flow is vented internally and therefore, there is no need for an external vent line.

PULLMASTER now incorporates the use of ***heavy duty stainless steel rings*** on all drum seal surfaces for prolonged seal life. All moving parts of the PULLMASTER Model PL5 planetary winch are totally enclosed and run in an oil bath. Anti-friction bearings are used on all turning components, assuring long, trouble free service with a minimum requirement for maintenance.

FEATURES

- **Replaces Existing Model PL4 Winches -** The Model PL5 has the same physical mounting dimensions as the industry standard Pullmaster Model PL4. This will allow for the interchange of this new model to be made without modifying the existing mounting surfaces.

- **Improved Performance -** Bare drum line pulls of 5000 lb. (22.2 kN) and line speed of 142 ft/min (43 m/min) can now be attained through the selection of the gear reduction and motor displacement.

- **Stainless Steel Drum Seal Surfaces -** To complement our industry leading usage of rubber coated seals in the manufacture of Pullmaster winches, heavy duty stainless steel drum seal surfaces have now been incorporated into every Pullmaster winch. This will ensure that the optimum life of the seals is obtained by providing a lasting rotating seal surface that is resistant to corrosion. Both service life and serviceability of the product is increased.

- **Three Piece Motor Construction -** The motor used in the Model PL5 is of a three piece construction which will facilitate easier repairs. All brake release passages are internally ported within the winch. This feature eliminates the use of hoses or tubing being mounted externally from the motor which are vulnerable to damage from external sources.

- **Designed for Field Service -** Conversions for the addition of the external brake release feature and the changing of brake rotation can be made without purchasing specific modified components.

  The conversion for an external brake release model involves the addition of a shuttle and a fitting in an existing drilled port.

  The changing of the brake rotation involves the rotating of the motor sub-assembly 180 degrees and the reconfiguring of the sprag clutch in the brake hub assembly.

OPTIONS

- **Cable Drums -** A wide range of optional drum sizes are available for PULLMASTER planetary winches to accommodate larger wire rope storage and also to conform with prevailing safety regulations relating to the ratio between wire rope diameter and drum diameter.

- **Drum Rotation -** Since the automatic disc brake of PULLMASTER winches is activated only when a load is lowered or in reverse rotation, a definite direction of rotation for hoisting is established. The direction of rotation is determined by looking at the motor side of the winch. Standard rotation for hoisting on the PL5 is counterclockwise. As an option, PULLMASTER winches are offered with the direction of rotation for hoisting a load opposite to the standard rotation.

- **Drum Grooving -** All cable drums of PULLMASTER planetary winches can be supplied with wire rope grooving. For such requirements, it is important to specify the size of wire rope used. Contact your local PULLMASTER representative for further details.

- **Emergency Free Fall -** This option permits the full release of a load. Once the emergency ‘free fall’ has been released, the load cannot be stopped before reaching the ground. Aside from an emergency load release, this option is important for an operation where a load has to be dropped at high velocity.

- **External Brake Release -** The disc brake of PULLMASTER planetary winches functions automatically. For operations where it is necessary to release the disc brake independently, an external brake release option is available for the PL5.

- **Hydraulic Motor -** PULLMASTER planetary winches are powered by hydraulic gear motors for hydraulic systems up to 2500 psi (147 bar). For operations in high pressure hydraulic systems, winch models can be made available with hydraulic piston motors.

DIMENSIONS

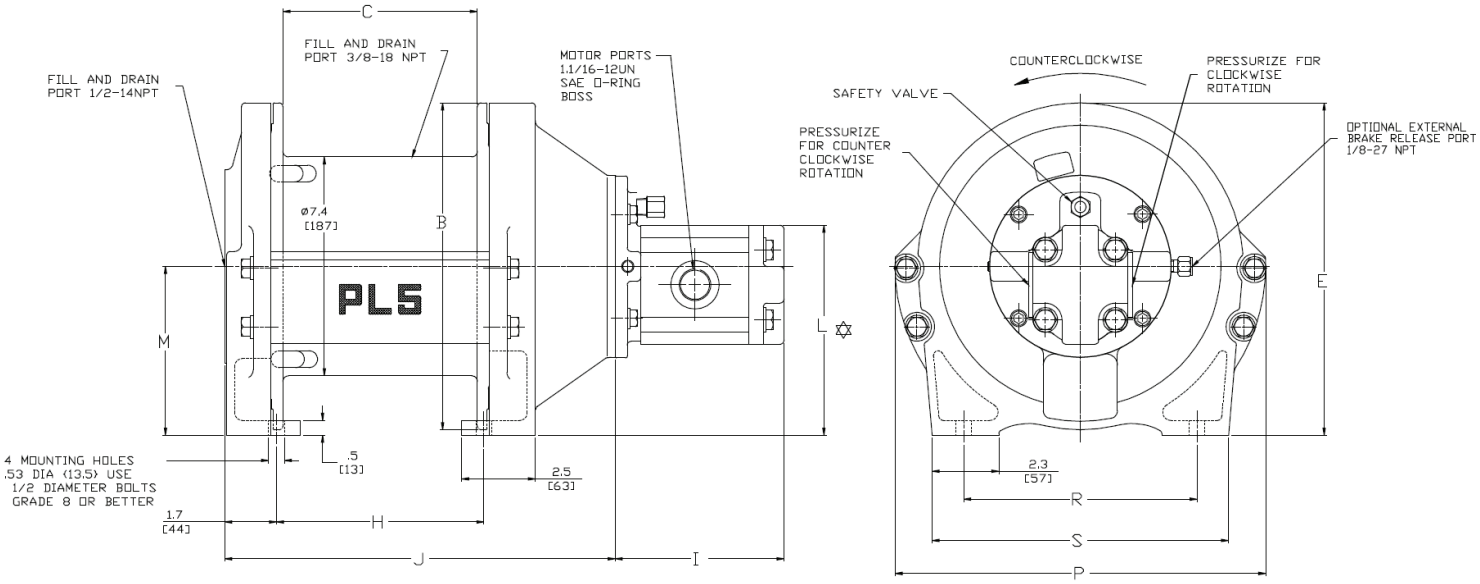

Drum	B	C	E	H	J	L	M	P	R	S	UNITS
-1	11.	6.	11.2	7,000	13.2	7.1	5.7	12.5	7.875	10.0	In.
	27	16	284	177.80	335	180	144	318	200.0	254	mm
-2	12.	6.	12.6	7,000	13.2	7.8	6.4	13.9	11,500	13.6	In.
	31	16	319	177.80	335	197	162	352	292.10	346	mm

Motor Code	Displacement cc/rev	I (in.)	I (mm)
-210	33	5.7	145
-211	27	5.3	135
-212	23	5.1	129
-213	14	4.5	116

The cable anchor of the drum is made for 1/2” wire rope maximum. The cable anchor of the **PULLMASTER** Model PL5 planetary winch is not designed to hold the rated maximum load. The cable drum requires 5 wraps of wire rope for security.

PERFORMANCE

Model Number	Hydraulic Requirement		Drum Torque	Drum RPM	Bare Drum		Mean Drum		Full Drum	
	Flow	Pressure			Line Pull	Line Speed	Line Pull	Line Speed	Line Pull	Line Speed
PL5-12-210-1	24 (us) gpm	2100 psi	17,578 lb-in	66	4500 lb	135 fpm	3914 lb	159 fpm	3328 lb	183 fpm
	91 l/min	145 bar	1986 Nm		20.0 kN	41 m/min	17.4 kN	48 m/min	14.8 kN	56 m/min
PL5-12-210-2	24 (us) gpm	2100 psi	17,578 lb-in	66	4500 lb	135 fpm	3723 lb	171 fpm	2945 lb	206 fpm
	91 l/min	145 bar	1986 Nm		20.0 kN	41 m/min	16.6 kN	52 m/min	13.1 kN	63 m/min
PL5-12-211-1	11 (us) gpm	2250 psi	15,625 lb-in	35	4000 lb	72 fpm	3479 lb	85 fpm	3098 lb	92 fpm
	42 l/min	155 bar	1765 Nm		17.8 kN	22 m/min	15.5 kN	26 m/min	13.8 kN	28 m/min
PL5-12-211-2	11 (us) gpm	2250 psi	15,625 lb-in	35	4000 lb	72 fpm	3309 lb	91 fpm	2695 lb	106 fpm
	42 l/min	155 bar	1765 Nm		17.8 kN	22 m/min	14.8 kN	28 m/min	12.0 kN	32 m/min
PL5A-12-212-1	11 (us) gpm	2400 psi	19,532 lb-in	29.5	5000 lb	60 fpm	4349 lb	71 fpm	3698 lb	82 fpm
	42 l/min	165 bar	2207 Nm		22.2 kN	18 m/min	19.3 kN	22 m/min	16.4 kN	25 m/min
PL5A-12-212-2	11 (us) gpm	2400 psi	19,532 lb-in	29.5	5000 lb	60 fpm	4136 lb	76 fpm	3272 lb	92 fpm
	42 l/min	165 bar	2207 Nm		22.2 kN	18 m/min	18.4 kN	23 m/min	14.6 kN	28 m/min
PL5-12-213-1	11 (us) gpm	2250 psi	7,813 lb-in	69	2000 lb	142 fpm	1740 lb	166 fpm	1479 lb	191 fpm
	42 l/min	155 bar	883 Nm		8.9 kN	43 m/min	7.7 kN	51 m/min	6.6 kN	58 m/min
PL5-12-213-2	11 (us) gpm	2250 psi	7,813 lb-in	69	2000 lb	142 fpm	1655 lb	177 fpm	1309 lb	216 fpm
	42 l/min	155 bar	883 Nm		8.9 kN	43 m/min	7.4 kN	54 m/min	5.8 kN	66 m/min

When the **PULLMASTER** PL5 is installed in an existing hydraulic circuit with a lesser volume and pressure the performance will change. Maximum pressure and maximum hydraulic volume must not be exceeded. Performance graphs for line pull vs. oil pressure and line speed vs. oil volume, are available upon request.

CABLE STORAGE

Drum Code	Barrel Dia.	Flange Dia.	Length	Wire Rope Diameter						
				1/8”	3/16”	1/4”	5/16”	3/8”	7/16”	1/2”
-1	7.38”	11.00”	6.56”	1382 ft.	670 ft.	348 ft.	218 ft.	157 ft.	110 ft.	100 ft.
	187 mm	279 mm	167 mm	421 m	204 m	106 m	67 m	48 m	34 m	31 m
-2	7.38”	12.38”	6.56”	2146 ft.	975 ft.	510 ft.	354 ft.	234 ft.	177 ft.	130 ft.
	187 mm	314 mm	167 mm	654 m	297 m	155 m	108 m	71 m	54 m	40 m

EXPLANATION OF MODEL CODING

PL 5 X - XX - XX - XX X - XXXX

BASIC UNIT SERIES

SIZE OF UNIT

REDUCTION RATIO
Only used for non-standard ratios

TYPE OF BRAKE
- 12 Automatic brake, counterclockwise hoisting, intravent - STANDARD
- 13 Automatic brake, external brake release, counterclockwise hoisting, intravent
- 14 Automatic brake, external brake release, clockwise hoisting, intravent
- 15 Automatic brake, clockwise hoisting, intravent

HYDRAULIC MOTOR
- 210 Gear Motor - 33 cc displacement - STANDARD
- 211 Gear Motor - 27 cc displacement
- 212 Gear Motor - 23 cc displacement
- 213 Gear Motor - 14 cc displacement

DRUM SIZE
- 1 7.38 inch drum diameter x 11.00 inch flange diameter x 6.56 inch length - STANDARD
- 2 7.38 inch drum diameter x 12.38 inch flange diameter x 6.56 inch length

OPTIONS

SPECIFICATION NUMBER
- Describes features not identified by preceding codes

NOTE: Clockwise and counterclockwise drum rotation is the direction of rotation for pulling or hoisting, established by looking at the hydraulic motor.

TYPICAL HYDRAULIC CIRCUIT

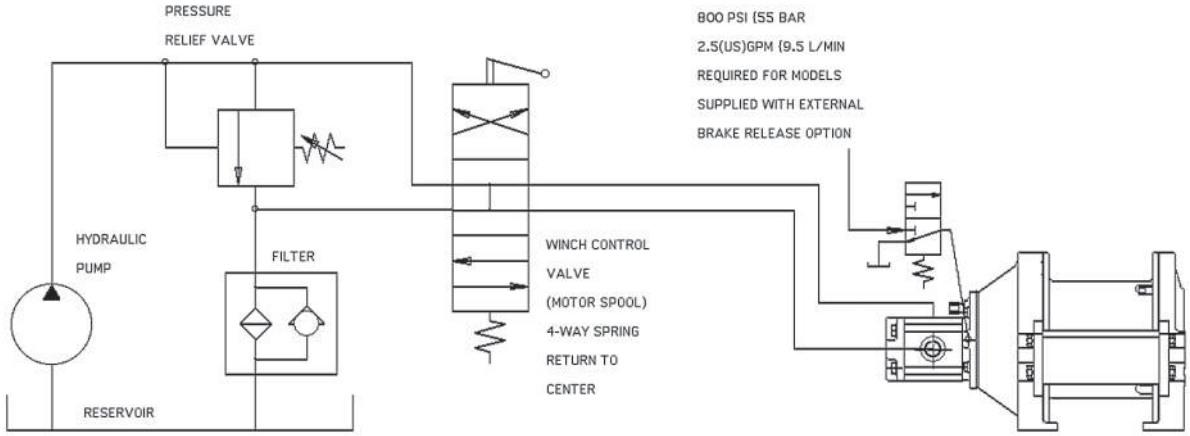

TYPICAL HYDRAULIC CIRCUIT - STANDARD CONTROL VALUE - Refer to above hydraulic circuit for installations where the winch is controlled by an individual control valve. Note that the valve must have a motor spool (both winch ports open to tank in neutral position). A motor drain line is not required. Refer to installation manual for alternate circuits.

Other models of PULLMASTER planetary winches are available for different lifting capacities and also with a “Rapid Reverse” feature.
Parts and repair service are available from authorized PULLMASTER distributors throughout Canada, the United States and most overseas areas.

IMPORTANT:
PULLMASTER planetary winches are neither designed nor intended for installation on equipment used in lifting or moving personnel.

TWG Headquarters, 11135 S James Ave
Jenks, OK 74037 USA
(918) 298-8300 I salesinfo@dovertwg.com

www.dovertwg.com

TWG Canada, 19350 22nd Ave
Surrey, BC V3Z 3S6 CANADA
(604) 547-2100 I salesinfo@dovertwg.com

© 2019 TWG. All rights reserved.