Pull MASTER®

Winch **Power.** Built to Order.

Experience the power of Pullmaster Planetary Winches.

Strength you can depend on.

Pullmaster® planetary winches are backed by the strength of TWG, a global leader in the development and manufacture of standard and engineered winch, gearbox and load information systems for worldwide industries.

Headquartered in Jenks, Oklahoma, TWG is comprised of seven companies that specialize in industry-specific winches and supporting electronic systems. They include Tulsa Winch, Inc., dp Winch, Pullmaster Winch, Greer Company, Gear Products, Rufnek and LANTEC.

TWG is part of the Dover Corporation, an NYSE-traded, multi-billion dollar corporation that manufactures a diverse range of engineered products and components for commercial and industrial use through more than 50 independent operating companies.

TWG
a DOVER company

Total Winch Power.

On Land and Sea.

In the inland waterways of Louisiana, a 12-inch dredge excavates sand and gravel that will later be used to make concrete.

A thousand miles away, a tower crane swings a two-ton slab of concrete into position—the beginning of a mile-long bridge that will link towns with cities.

In the woods of British Columbia, a grapple loader lifts and loads bundles of raw timber and transports them to a sawmill, where the wood will be used to construct a fishing dock.

Off the coast of Prince Edward Island, a fishing crew springs to life, hoisting up their catch of bluefin before pulling up anchor and heading to shore.

Wherever the world needs lifting and pulling, Pullmaster is there—providing the winch power global industries depend on to work safer, smarter and more efficiently.

Pullmaster is one of the world's leading manufacturers of planetary hydraulic winches built to order for the commercial fishing, logging, heavy construction, drilling, mining, dredging, and marine construction industries. From our computer-controlled manufacturing facility in Vancouver, British Columbia, Pullmaster builds winches for specific applications using the finest materials, superior engineering and the highest quality craftsmanship. Pullmaster's applied computer technology, integrated manufacturing and computerized production machinery are used in conjunction with our ISO 9001:2000 Quality Management System to produce world-class planetary products.

With one of the industry's most knowledgeable teams of engineers, service technicians, and worldwide distributors, Pullmaster delivers the reliable, high-performance operation and long equipment life you need to get the job done—no matter where you are.

Advanced Features and Superior Benefits for All Pullmaster Hydraulic Planetary Winches

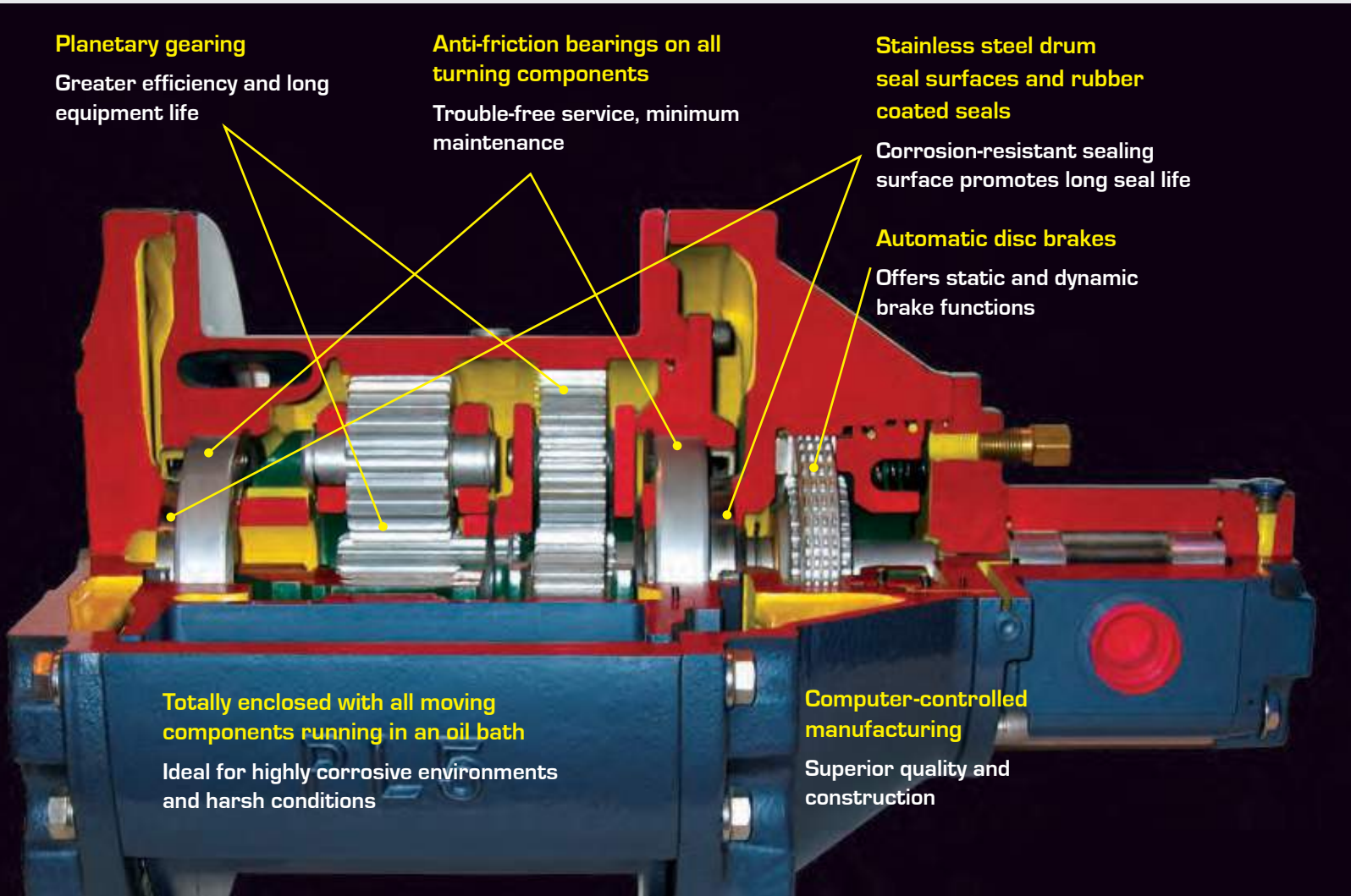

Power That's Built to Order.

And when we say **built to order**, we mean it. TWG Pullmaster manufactures a comprehensive line of planetary hydraulic winches that are built for your specific application. Whether you need equal speed, rapid reverse, recovery or free fall, Pullmaster winches deliver the quality, performance and outstanding reliability you can depend on.

Select Your Options

Cable Drums |

Choose from Pullmaster's wide range of optional drum sizes to accommodate larger wire rope storage and conform with prevailing safety regulations as they relate to the ratio between wire rope diameter and drum diameter.

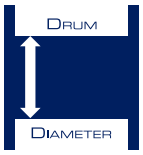

Drum Rotation |

Because the automatic disc brake on all Pullmaster winches is activated only when a load is lowered, or in reverse rotation, a definite direction of rotation for hoisting is established. The direction of rotation is determined by looking at the motor side of the winch. Standard rotation for hoisting on all PL and R series models is counterclockwise. Standard rotation for hoisting on all M and H series models is clockwise. As an option, Pullmaster winches are also offered with the direction of rotation for hoisting a load opposite to the standard rotation.

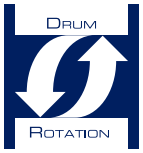

Drum Grooving |

All cable drums on Pullmaster planetary winches can be built with wire rope grooving. Please specify the wire rope size that's right for your application.

Free Spool |

A mechanism that permits the wire rope to be pulled off the cable drum by hand. On Pullmaster R series winches, free spooling is a standard feature offered with manual or hydraulically actuated free spool control. Most Pullmaster M and H series winches offer hydraulically actuated free spool.

Free Fall |

Several Pullmaster winch models offer a free fall attachment. Choose the free fall option that is right for your application:

- **Emergency Free Fall** enables the full release of a load. Once the emergency free fall function is engaged, the load cannot be stopped before reaching the ground. Much like an emergency load release function on a hydraulic crane, this option is important in applications where a load needs to be dropped at a high velocity.
- **Controlled Free Fall** allows one-third of the winch's rated line pull capacity to be released in a controlled free fall where the load can be brought to a smooth stop at any point on the way down.
- **Combination Emergency and Controlled Free Fall** offers both free fall options.

External Brake Release | All Pullmaster planetary winches offer a disc brake that functions automatically. The external brake release option enables brake release independently and is available on most Pullmaster planetary winch models.

Hydraulic Motor | Pullmaster planetary winches are powered by hydraulic gear motors for systems up to 2500 psi. For applications in high-pressure hydraulic systems, Pullmaster winch models are offered with hydraulic piston motors.

Equal Speed

Pullmaster Equal Speed planetary winches offer maximum torque in both directions of rotation and give operators maximum control over the load. In applications that require precise lifting and lowering and load suspension, Pullmaster Equal Speed winches deliver the industry's most reliable performance. Ideal for a wide range of applications or special operations.

- Pulling capacities from 1,100 to 85,000 lbs (4.9 to 374.0 kN)
- Static and dynamic integral brake
- Optional hydraulic motors
- Ideal for a wide range of applications

Rapid Reverse

Pullmaster Rapid Reverse planetary winches provide reverse speeds that are 4.5 times faster than forward speeds. In applications that include lighter loads or swing functions, Pullmaster's Rapid Reverse winches create less resistance and increase cycle times and productivity. Ideal for a variety of applications including fishing, dredging and marine applications.

- Pulling capacities from 3,800 to 85,000 lbs (16.9 to 374.0 kN)
- Static and dynamic integral brake
- Ideal for a wide range of applications and special operations

Free Fall

Pullmaster hydraulic planetary winches with Free Fall enable operators to lift and lower loads at controlled speeds or lower at high velocities. Pullmaster's Free Fall option is available in Emergency Free Fall, Controlled Free Fall or Combination Emergency and Controlled Free Fall on several Pullmaster Equal Speed or Rapid Reverse winch models.

- **Emergency Free Fall** enables the full release of a load much like an emergency load release function on a hydraulic crane. Ideal in applications where a load needs to be dropped at a high velocity.
- **Controlled Free Fall** allows one-third of the winch's rated line pull capacity to be released in a controlled free fall where the load can be brought to a smooth stop at any point on the way down.
- **Combination Emergency and Controlled Free Fall** offers both free fall options.

- Pulling capacities from 2,000 to 50,000 lbs (8.9 to 222.4 kN)
- Static or dynamic integral brake
- Optional hydraulic motors

Recovery

Pullmaster Recovery winches are ideal for pulling and recovering heavy equipment and vehicles. Pullmaster offers four winch models specifically designed for heavy-duty recovery operations.

- Pulling capacities from 11,021 to 15,492 lbs (49.0 to 68.6 kN)
- Hydraulic or manual free spool feature comes standard. Free spool feature permits the wire rope to be pulled off the cable drum by hand.
- Ideal for mobile pulling operations

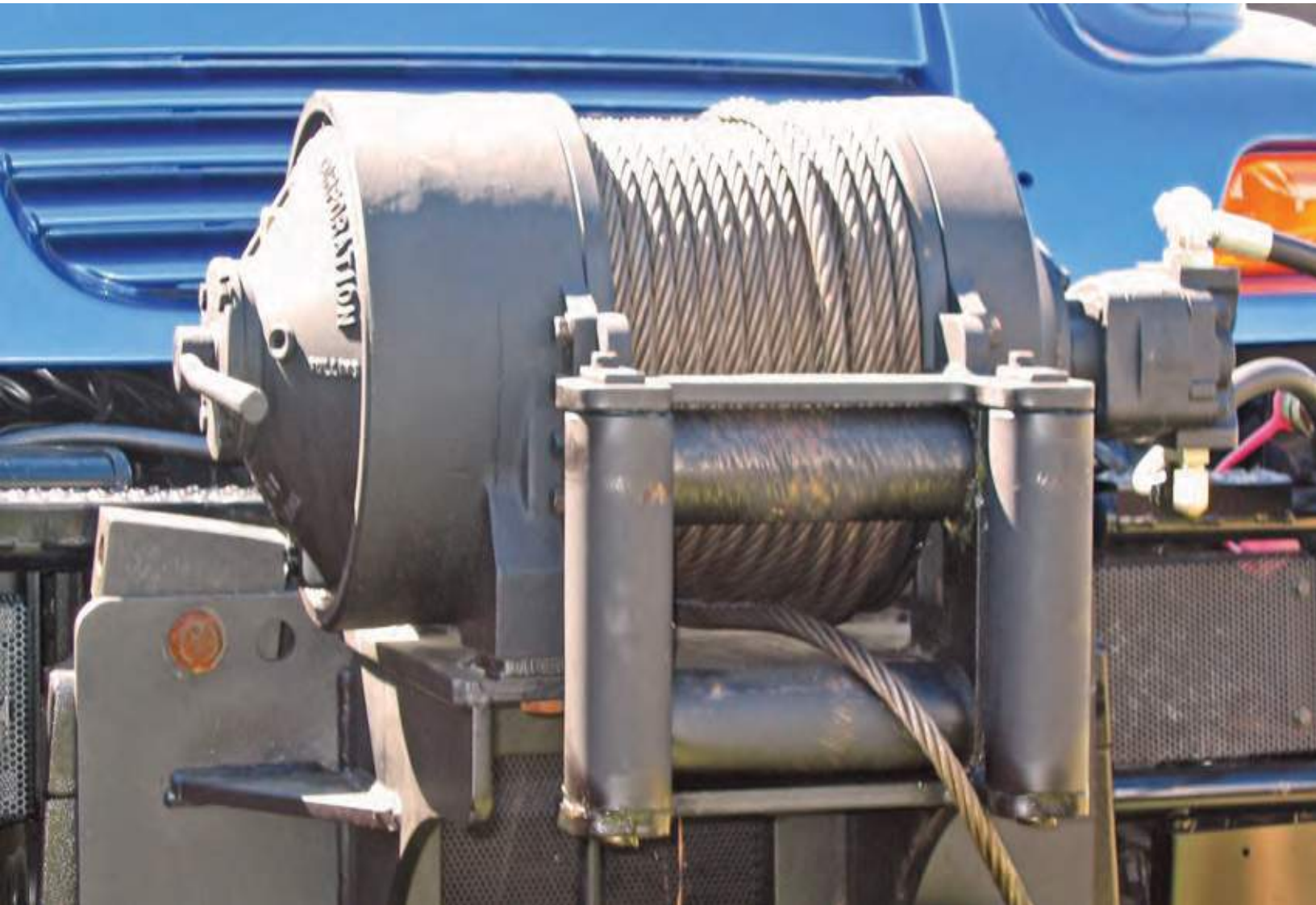

PL Series

PullMASTER® Planetary Winches

Equal Speed

High-performance, high-efficiency planetary winches offering equal speed in both directions. Ideal for hoisting and lowering applications.

- Hydraulic gear motor
- Spring-applied, pressure-released, automatic multi-disc brake
- Over-running clutch enables free rotation in the hoisting direction without affecting the brake.
- During lower operations, the over-running clutch locks causing the disc brakes to rotate between a series of divider discs. Dynamic braking is then achieved by modulation of the winch control valve handle. When the control is returned to neutral position, the brake applies automatically.
- A counter-balance valve is not required for smooth and positive “Down” control.

PL Series — Equal Speed in Both Directions

Model	Bare Drum		Full Drum		Drum Capacity
	Line Pull	Line Speed	Line Pull	Line Speed	
PL1-12-227-1	1,100 lb	78 fpm	821 lb	104 fpm	1/4" - 87 ft
	4.9 kN	24 m/min	3.7 kN	32 m/min	27 m
PL2-12-228-1	2,204 lb	83 fpm	1,633 lb	111 fpm	5/16" - 122 ft
	9.8 kN	25 m/min	7.3 kN	34 m/min	37 m
PL2A-12-228-1	1,285 lb	142 fpm	952 lb	189 fpm	5/16" - 122 ft
	5.7 kN	43 m/min	4.2 kN	58 m/min	37 m
PL5A-12-212-1	5,000 lb	60 fpm	3,698 lb	82 fpm	7/16" - 110 ft
	22.2 kN	18 m/min	16.4 kN	25 m/min	34 m
PL5-12-210-1	4,500 lb	135 fpm	3,328 lb	183 fpm	7/16" - 110 ft
	20.0 kN	41 m/min	14.8 kN	56 m/min	34 m
PL5-12-211-1	4,000 lb	72 fpm	3,098 lb	92 fpm	7/16" - 110 ft
	17.8 kN	22 m/min	13.8 kN	28 m/min	34 m
PL5-12-213-1	2,000 lb	142 fpm	1,479 lb	191 fpm	7/16" - 110 ft
	8.9 kN	43 m/min	6.6 kN	58 m/min	34 m
PL8-3-30-1	7,000 lb	122 fpm	5,202 lb	164 fpm	1/2" - 196 ft
	31.1 kN	37 m/min	23.1 kN	50 m/min	60 m

⚠ CAUTION:	⚠ WARNING:
The last 5 wraps of cable must be left on the drum to assist the cable clamp in holding the load.	Winches and capstans are not intended to be used for lifting or moving of persons.

M/H Series

Pull-MASTER® Planetary Winches

M Series:
Equal Speed

High-performance, high-efficiency planetary winch with equal speed in both directions. The M series offers exceptionally smooth lowering control of the maximum rated load in a step-less operation.

- Hydraulic gear motor
- Spring-applied, pressure-released, automatic multi-disc brake
- Over-running clutch enables free rotation in the hoisting direction without affecting the brake.
- During lower operations, the over-running clutch locks causing the disc brakes to rotate between a series of divider discs. Dynamic braking is then achieved by modulation of the winch control valve handle. When the control is returned to neutral position, the brake applies automatically.
- A counter-balance valve is not required for smooth and positive "Down" control.

H Series:
Rapid Reverse

High-performance, high-efficiency planetary winch with rapid reverse speed 4.5 times faster than forward speed. In reverse rotation (lowering), the maximum load can be positively controlled at a line speed equal to the hoisting speed.

- Hydraulic gear motor
- Spring-applied, pressure-released multi-disc brake with static and dynamic functions
- During hoisting, the hydraulic motor drives direct into the planetary reductions without affecting the brake assembly. When forward rotation is stopped, an over-running clutch will lock and the multi-disc brake will positively hold the maximum load.
- During lowering, the brake is released automatically and then modulated for the desired lowering speed by a single control lever.
- A counter-balance valve is not required for smooth and positive "Down" control.

M Series — Equal Speed in Both Directions
H Series — Rapid Reverse

Model	Bare Drum		Full Drum		Drum Capacity
	Line Pull	Line Speed*	Line Pull	Line Speed*	
M5-3-230-1	6,000 lb	69 fpm	4,091 lb	101 fpm	1/2" - 152 ft
	26.7 kN	21 m/min	18.2 kN	31 m/min	46 m
M8-3-30-1 H8-3-30-1	8,500 lb	116 fpm	5,795 lb	170 fpm	1/2" - 152 ft
	37.8 kN	35 m/min	25.8 kN	52 m/min	46 m
M8A-3-30-1 H8A-3-30-1	7,000 lb	135 fpm	4,773 lb	199 fpm	1/2" - 152 ft
	31.1 kN	41 m/min	21.2 kN	61 m/min	46 m
M8B-3-30-1 H8B-3-30-1	3,790 lb	249 fpm	2,584 lb	366 fpm	1/2" - 152 ft
	16.9 kN	76 m/min	11.5 kN	111 m/min	46 m
M12-3-97-1 H12-3-97-1	12,121 lb	104 fpm	7,143 lb	176 fpm	5/8" - 222 ft
	53.9 kN	32 m/min	31.8 kN	54 m/min	68 m
M12B-3-97-1 H12B-3-97-1	6,120 lb	205 fpm	3,606 lb	348 fpm	5/8" - 222 ft
	27.2 kN	63 m/min	16.0 kN	106 m/min	52 m
M18-3-101-1 H18-3-101-1	18,000 lb	122 fpm	11,288 lb	195 fpm	3/4" - 170 ft
	80.1 kN	37 m/min	50.2 kN	59 m/min	43 m
M25-7-86-1 H25-7-86-1	25,000 lb	140 fpm	16,860 lb	207 fpm	7/8" - 140 ft
	111.2 kN	43 m/min	75.0 kN	63 m/min	43 m
M25B-7-86-1 H25B-7-86-1	12,698 lb	273 fpm	8,564 lb	405 fpm	7/8" - 140 ft
	56.5 kN	83 m/min	38.1 kN	124 m/min	43 m
M50-7-86-1 H50-7-86-1	50,000 lb	69 fpm	33,889 lb	102 fpm	1 1/4" - 177 ft
	222.4 kN	21 m/min	150.7 kN	31 m/min	54 m
M75-7-191-1 H75-7-191-1	75,000 lb	72 fpm	41,748 lb	129 fpm	1 1/8" - 727 ft
	333.3 kN	22 m/min	185.6 kN	39 m/min	222 m

*For **H Series** reversing speeds, multiply the line speeds listed by a factor of 4.5.

HL Series — Rapid Reverse & 2-Speed Forward

Model	Low Speed				High Speed				Drum Capacity
	Bare Drum		Full Drum		Bare Drum		Full Drum		
	Line Pull	Line Speed	Line Pull	Line Speed	Line Pull	Line Speed	Line Pull	Line Speed	Line P
HL25-7-86-1	25,000 lb	140 fpm	16,860 lb	207 fpm	5,357 lb	651 fpm	3,613 lb	965 fpm	7/8" - 140 ft
	111.2 kN	43 m/min	75.0 kN	63 m/min	23.8 kN	198 m/min	16.1 kN	294 m/min	43 m

⚠ CAUTION:	⚠ WARNING:
The last 5 wraps of cable must be left on the drum to assist the cable clamp in holding the load.	Winches and capstans are not intended to be used for lifting or moving of persons.

R Series

PullMASTER® Planetary Winches

Recovery

High-performance, high-efficiency recovery winch with power in both directions. Standard free spool feature can be manually or automatically engaged. Ideal for tough mobile pulling applications or operations that require maximum control when lifting and lowering loads.

- Spring-applied, pressure-released multi-disc brake with dynamic and static function
- A counter-balance valve or hydraulic brake valve is not required for dynamic braking.
- Free spool feature permits the wire rope to be pulled off the cable drum by hand.

R Series			Planetary Recovery Winches		
Model	Bare Drum		Full Drum		Drum Capacity
	Line Pull	Line Speed	Line Pull	Line Speed	
R5-12-70-1M R5-12-70-1F	11,020 lb	37 fpm	5,573 lb	74 fpm	1/2" - 209 ft
	49 kN	11 m/min	24.8 kN	23 m/min	63 m
R7-15-135-1M R7-15-135-1F	15,429 lb	28 fpm	9,000 lb	49 fpm	5/8" - 124 ft
	68.6 kN	9 m/min	40.0 kN	15 m/min	38 m

⚠ CAUTION:	⚠ WARNING:
The last 5 wraps of cable must be left on the drum to assist the cable clamp in holding the load.	Winches and capstans are not intended to be used for lifting or moving of persons.

www.dovertwg.com

Pullmaster Model Code

XX XX - XXX - XX - XX X

Basic Unit Series
PL = Equal speed in both directions
M = Equal speed in both directions
H = Rapid reverse
HL = Low forward, rapid forward, rapid reverse
R = Recovery winch

Size of Unit

Reduction Ratio
Only used for non-standard reduction ratios

Type of Brake
Contact Pullmaster for a full list of brake options

Hydraulic Motor

Drum Size

Other Options
M = Manually controlled freespooling
F = Hydraulically controlled freespooling
C = Controlled free fall
D = Emergency free fall
G = Controlled and emergency free fall

TWG Headquarters, 11135 S James Ave
Jenks, OK 74037 USA
(918) 298-8300 I salesinfo@dovertwg.com

www.dovertwg.com

TWG Canada, 19350 22nd Ave
Surrey, BC V3Z 3S6 CANADA
(604) 547-2100 I salesinfo@dovertwg.com

© 2019 TWG. All rights reserved.